Best Track Mounting Instructions

for all Fast Track timer models

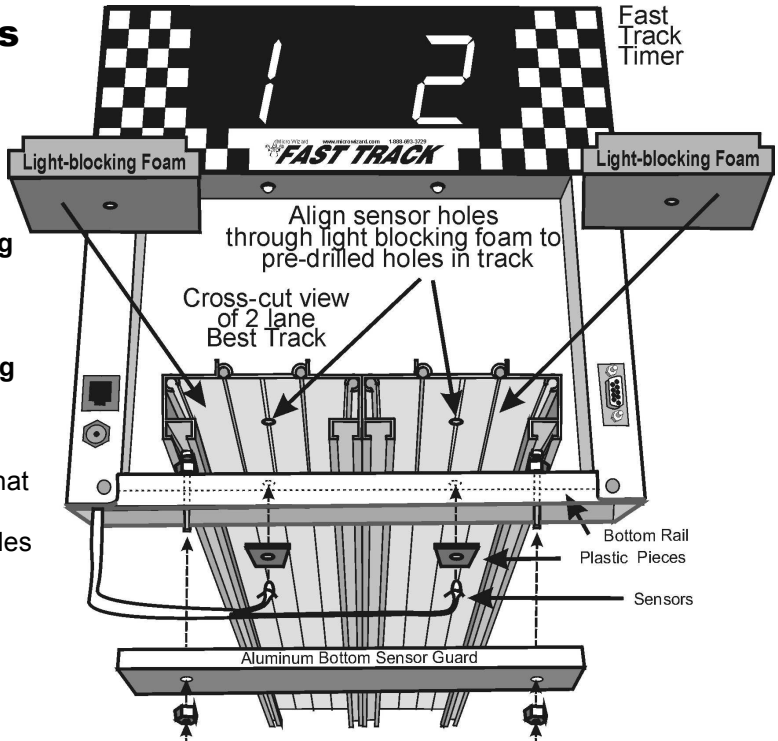

FOR KIT

Materials:

2 – 1" Bolts. 4 Nuts, 1 Aluminum Bottom Sensor Guard, 1 Plastic Square for each lane, 1 light-blocking Foam for each lane

Tools Needed for Assembly:

Adjustable Pliers, Framing Square, Hot Glue, Marking Pencil, 1/8" and ¼" Drill Bits and Drill, Ruler

Instructions:

1. On bottom rail, mark off 3/4" from both sides. From that point, mark and drill holes with a 1/8" bit for sensors, using these measurements that should match the holes that are in the center of each lane of your track:

   First lane – 2 ½", Second Lane – 6",

   Third Lane – 9 ½", Fourth Lane – 13",

   Fifth Lane – 16 ½", and Sixth Lane – 20".
2. From the first and last lane holes measure toward the outer ends of the rail 1 29/64" and mark. Drill a hole in each end with a ¼" bit. Clean off any burrs with a file or large drill bit. These two holes should line up with the grooves in the outside bottom lane section of your track.
3. Center the plastic pieces over the sensor holes under the bottom rail and glue in place. Redrill a 1/8" hole through the sensor holes and through the plastic piece.
4. Place sensor guard over bottom rail and center between lines and drill with a ¼" bit.
5. Push sensors into the plastic pieces under the track. Glue wire and sensors in place with hot glue.
6. Go to instructions below to mount on track.

FOR ASSEMBLED TIMER

1. Slide bolts down the grooves in the outside bottom lane sections of your track. Using a framing square, make sure they align with the holes already drilled in your track by Best Track.
2. Tighten bolt down with a nut.
3. Put timer on track. If you need to hinge open the bottom rail, you can do this by unfastening the screw on the side of the timer with the computer serial connector.
4. Push bolts through mounting holes.
5. Put bolts through the aluminum bottom sensor guard mounting holes. Secure with the last two nuts.
6. Slide light-blocking foam under track, being sure to line-up the holes in the track through the foam to the sensor in the bottom rail.

MOUNTING INSTRUCTIONS FOR OPTIONAL REMOTE START SWITCH

3 RJ11 Socket (telephone type socket)
Bolt "L" Bracket to track and plug cable into the RJ11 socket. Plug the other end of the cable into the RJ11 socket located on the leg of the timer

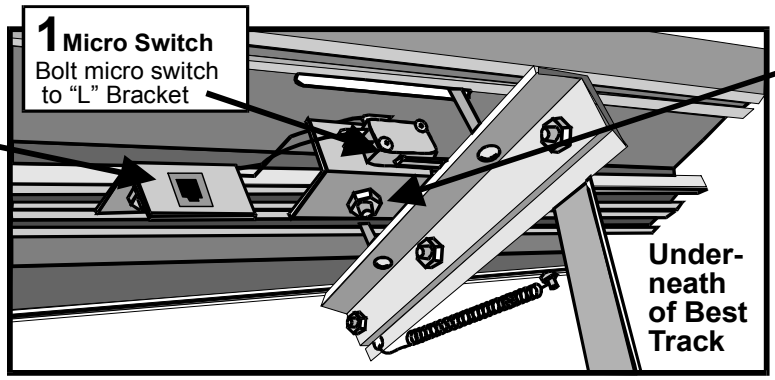

2 "L" Bracket
Attach "L" Bracket to track so that the micro switch lever is pressed in when gate is closed. When the gate releases the cars, it opens the switch and starts the timer.
Make sure that the switch remains open during the length of the race - closing the switch too soon will reset the timer and result in inaccurate times.